HYDRAULIC

GEAR

PUMPS

DETAIL CATALOGUE

VARAK

HYDRAULICS

10/0P

GROUP 10/0P PUMP

VARAK HYDRAULICS

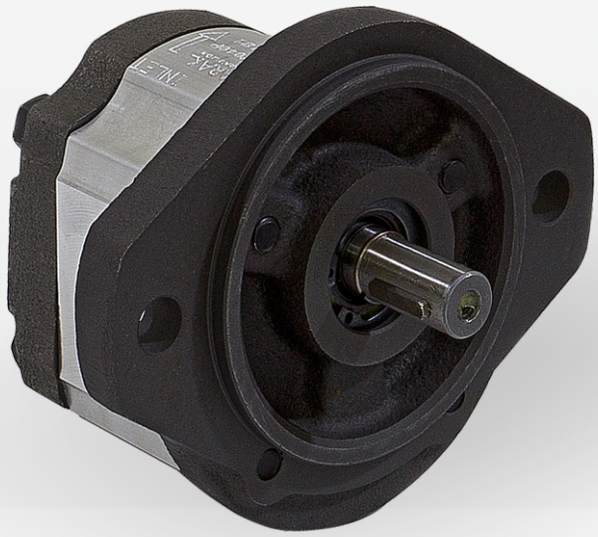

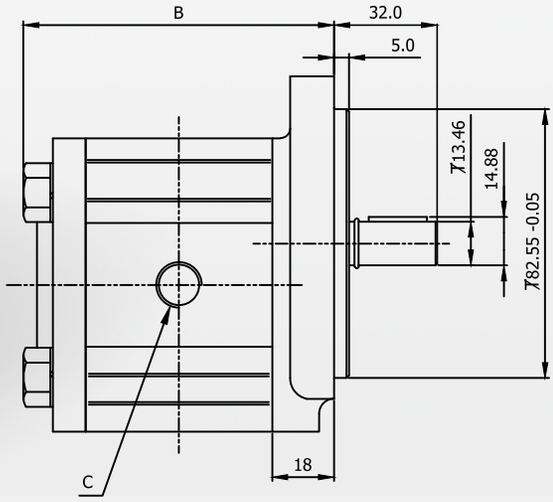

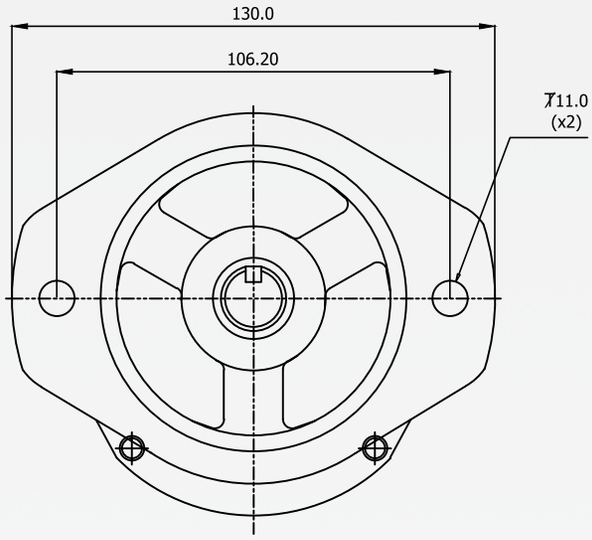

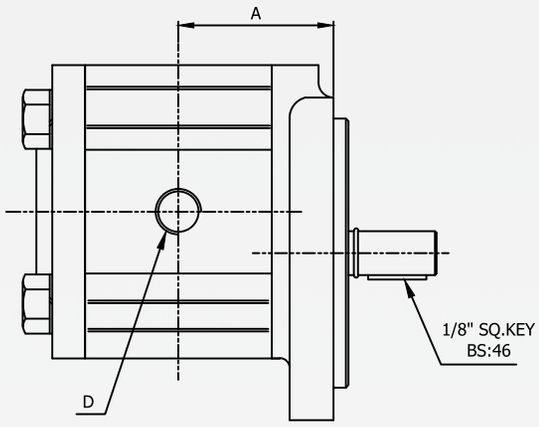

Model No.	Nominal Displacement cc/rev	Nominal Delivery lpm @ 1500 rpm	Max. Working Pressure (P1) Bar	Max. Speed rpm	DIMENSION			
					A	B	SUCTION	DELIVERY
					mm	mm		
10 C 1	1	1.2	200	3000	37.30	76.60	G 3/8”	G 3/8”
10 C 1.2	1.2	1.8	200	3000	37.60	77.20		
10 C 1.6	1.6	2.5	200	3000	38.10	78.20		
10 C 2.2	2.2	3.4	200	3000	38.80	79.60		
10 C 3.2	3.2	4.8	200	3000	39.80	81.60		
10 C 3.8	3.8	5.8	200	3000	40.60	83.20	G 1/2”	G 1/2”
10 C 4.5	4.5	6.8	200	3000	41.30	84.60		

GROUP 10/0P PUMP

VARAK HYDRAULICS

SHAFTS

P

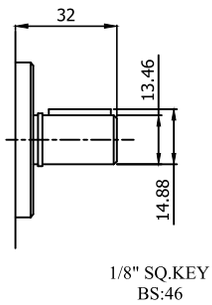

MOUNTING FLANGE

S

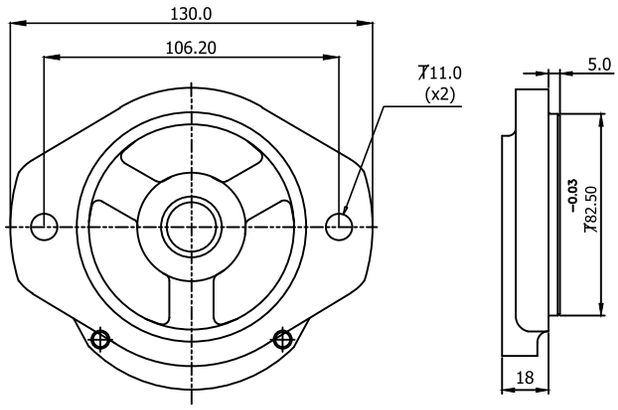

PORTS

CODE - T

Suction

Delivery

TYPE	C	D
10 C 1 to10 C 3.2	G 3/8”	G 3/8”
10 C 3.8 to 10 C 4.5	G 1/2”	G 1/2”

HOW TO ORDER (GROUP 10/OP PUMP)

GROUP	MODEL	ROTATION	SHAFT	MOUNTING	PORT	REAR COVER

10/OP

MODEL	cc/rev	lpm @ 1500 rpm
10 C 1	1	1.2
10 C 1.2	1.2	1.8
10 C 1.6	1.6	2.5
10 C 2.2	2.2	3.4
10 C 3.2	3.2	4.8
10 C 3.8	3.8	5.8
10 C 4.5	4.5	6.8

R	CW
L	CCW

P	Parallel ⌀ 13.46

S	SAE A - 2 bolt

T	Threaded

V	Standard

20/1P

GROUP 20/1P PUMP

VARAK HYDRAULICS

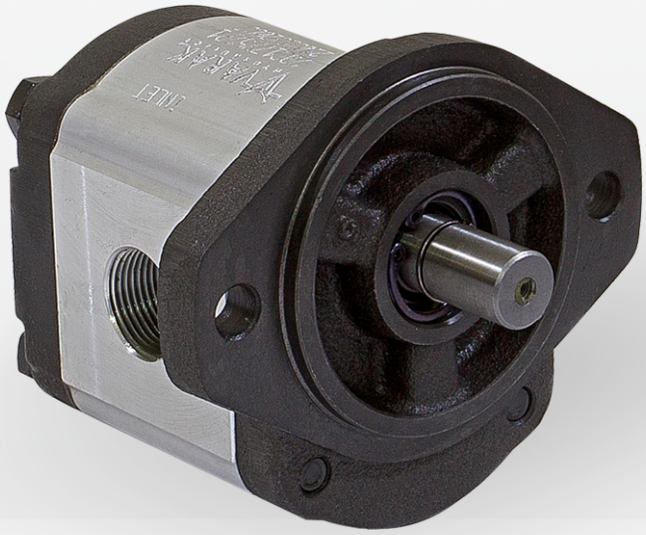

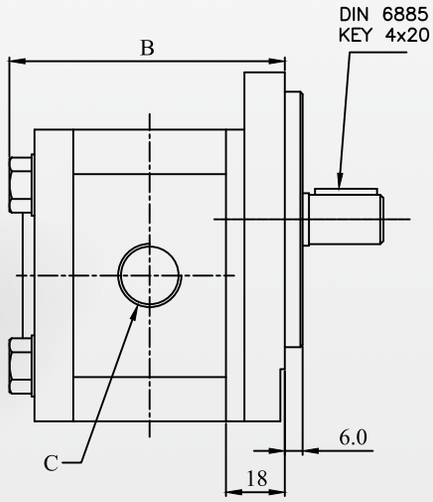

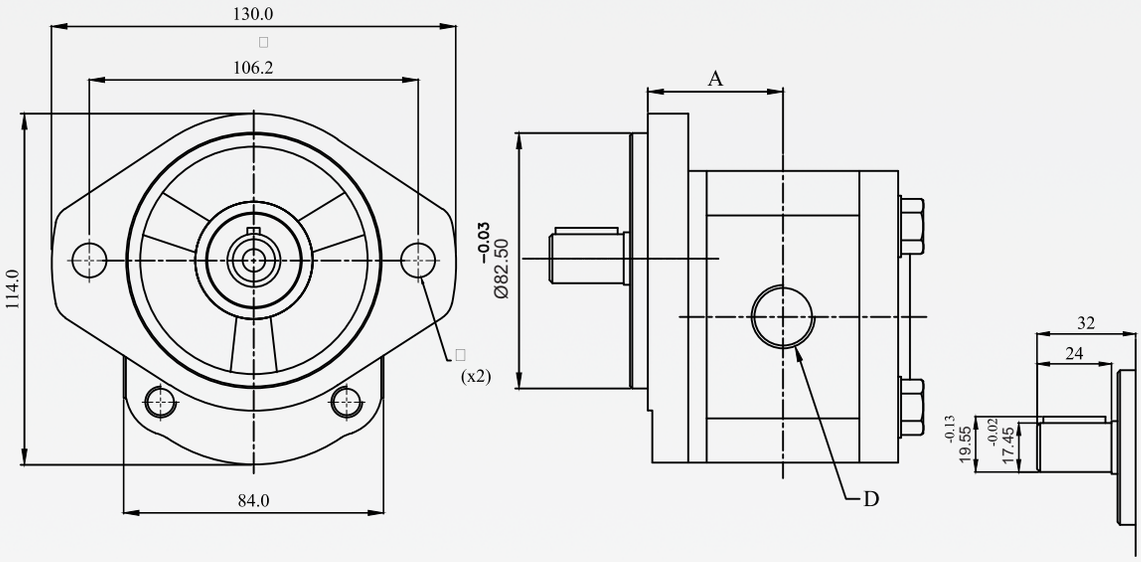

Model No.	Nominal Displacement cc/rev	Nominal Delivery lpm @ 1500 rpm	Max. Working Pressure (P1) Bar	Max. Speed rpm	DIMENSION			
					A	B	SUCTION	DELIVERY
					mm	mm		
20 C 6.1	6.1	8.0	250	3500	41.60	90.50	G 1/2”	G 1/2”
20 C 7	7	9.5	250	3500	42.40	92.00		
20 C 9	9	13.1	250	3500	44.40	96.00		
20 C 12	12	16.6	250	3500	46.20	99.50	G 3/4”	
20 C 14	14	20.5	250	3000	48.20	103.50		G 3/4”
20 C 17	17	24.0	250	3000	50.40	108.00		
20 C 19	19	27.7	230	3000	52.40	112.00		
20 C 22	22	33.0	210	3000	55.60	118.50		
20 C 28	28	41.0	180	2500	59.90	127.00		

PORTS

CODE - T

Suction

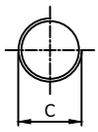

Delivery

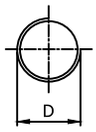

TYPE	C	D
20 C 6.1 to 20 C 9	G 1/2”	G 1/2”
20 C 12	G 3/4”	G 1/2”
20 C 14 to 28	G 3/4”	G 3/4”

HOW TO ORDER (GROUP 1P PUMP)

GROUP	MODEL	ROTATION	SHAFT	MOUNTING	PORT	REAR COVER

20/1P

MODEL	cc/rev	lpm @ 1500 rpm
20 C 6.1	6.1	8.0
20 C 7	7	9.5
20 C 9	9	13.1
20 C 12	12	16.6
20 C 14	14	20.5
20 C 17	17	24.0
20 C 19	19	27.7
20 C 22	22	33.0
20 C 28	28	41.0

R	CW
L	CCW

P	Parallel T 17.45

S	SAE A - 2 bolt

T	Threaded

V	Standard

30/2P

GROUP 30/2P PUMP

VARAK HYDRAULICS

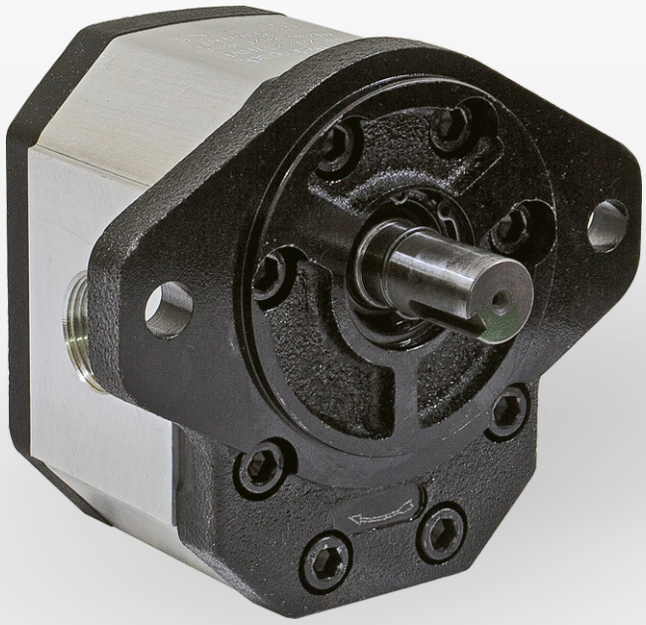

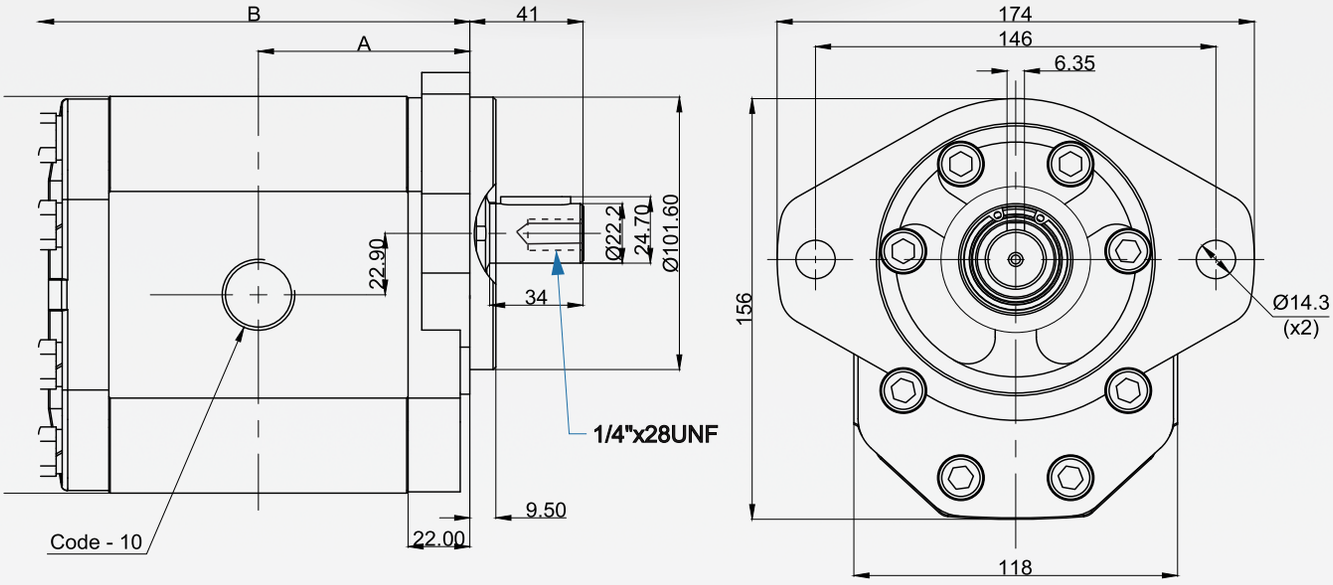

Model No.	Nominal Displacement cc/rev	Nominal Delivery lpm @ 1500 rpm	Max. Working Pressure Bar	Max. Speed rpm	DIMENSION			
					A	B	SUCTION	DELIVERY
					mm	mm		
30 C 20	20	28.0	250	3000	56.10	118.15	G 3/4”	G 3/4”
30 C 22	22	31.0	250	3000	57.60	121.15		
30 C 25	25	36.0	250	3000	58.30	123.15		
30 C 28	28	40.0	250	3000	60.20	126.15		
30 C 32	32	46.0	250	3000	66.50	141.15	G 1”	
30 C 36	36	51.0	250	2800	68.00	145.15		
30 C 42	42	60.0	230	2500	70.80	150.65		
30 C 46	46	66.0	230	2300	72.70	155.15		
30 C 50	50	72.0	200	2100	74.50	159.15		
30 C 55	55	79.0	200	1750	76.70	163.15		
30 C 60	60	86.0	180	1750	78.70	168.15	G 1-1/4”	

GROUP 30/2P PUMP

VARAK HYDRAULICS

SHAFTS

Code - P

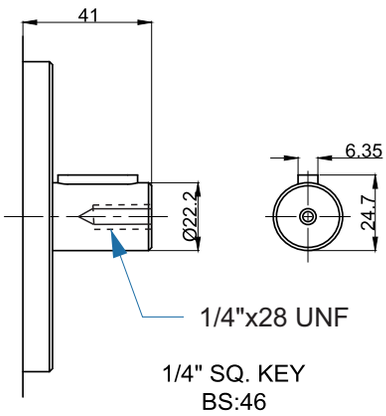

MOUNTING FLANGE

Code - S

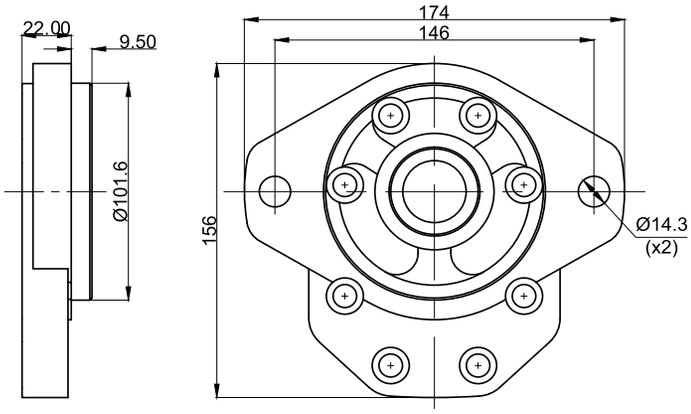

PORTS

Code - 10

Suction

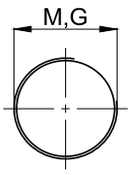

TYPE	M	G
30 C 20 to 30 C 28	M27x1.5	G 3/4”
30 C 22 to 30 C 55	M33x1.5	G 1”
30 C 60	M33x1.5	G 1-1/4”

Delivery

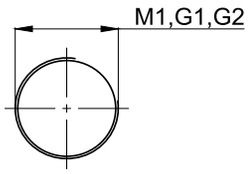

TYPE	M	G1	G2
30 C 20 to 30 C 60	M27x1.5	G 3/4”	--
30 C 22 to 30 C 38	--	–	G 1/2”
30 C 36 to 30 C 60	--	–	G 3/4”

HOW TO ORDER (GROUP 1P PUMP)

GROUP	MODEL	ROTATION	SHAFT	MOUNTING	PORT	REAR COVER

30/2P

MODEL	cc/rev	lpm @ 1500 rpm
30 C 20	20	28.0
30 C 22	22	31.0
30 C 25	25	36.0
30 C 28	28	40.0
30 C 32	32	46.0
30 C 36	36	51.0
30 C 42	42	60.0
30 C 46	46	66.0
30 C 50	50	72.0
30 C 55	55	79.0
30 C 60	60	86.0

R	CW
L	CCW

P	Parallel Ø 22.22

S	SAE B - 2 bolt

T

V	Standard

10/OP + 10/OP

GROUP 10OP+10OP (Front) PUMP

VARAK HYDRAULICS

WE ARE MANUFACTURING TANDEM PUMPS WITH 'OLDHAM COUPLING' CONNECTION.

Benefits of the Oldham coupling:-

1. Interchangeability with combination of any pump(cc).
2. Both the pumps can be used at peak pressure.
3. The protection parts of the tang shaft seats in properly with coupling.
4. Since it is OLDHAM COUPLING, even if the motor bell housing pump (1st) and 2nd pumps are misaligned the functioning won't be affected.
5.The life of pumps are more, as the Oldham coupling takes care of the pump in its alignment. The guide bush life is fantastic and volumetric efficiency maintained.

ADVANTAGES:-

1.Both the pumps are connected with oldham coupling. By removing two bolts, the rear pump can be replaced without disturbing the first pump mounting. (if failure or replacement occurs at any stage)

2.Since it is separate construction. it is cost effective in the future as total pump need not have to replace.

Front or Rear pump can be procured separately from factory/dealers/stockists at any time.

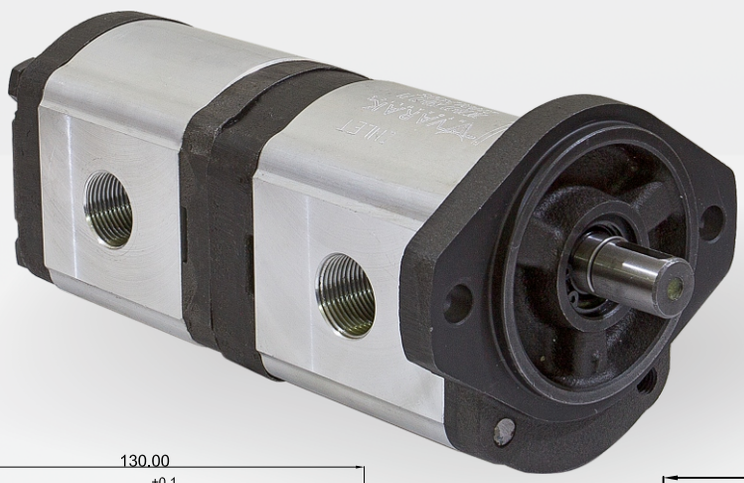

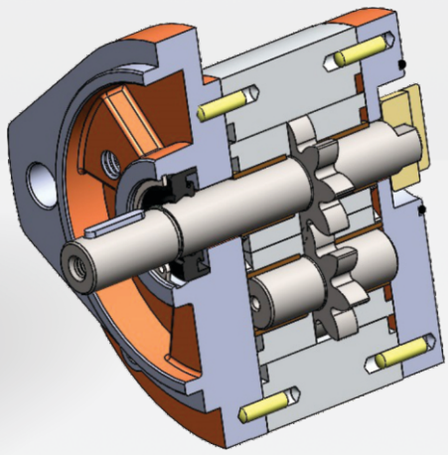

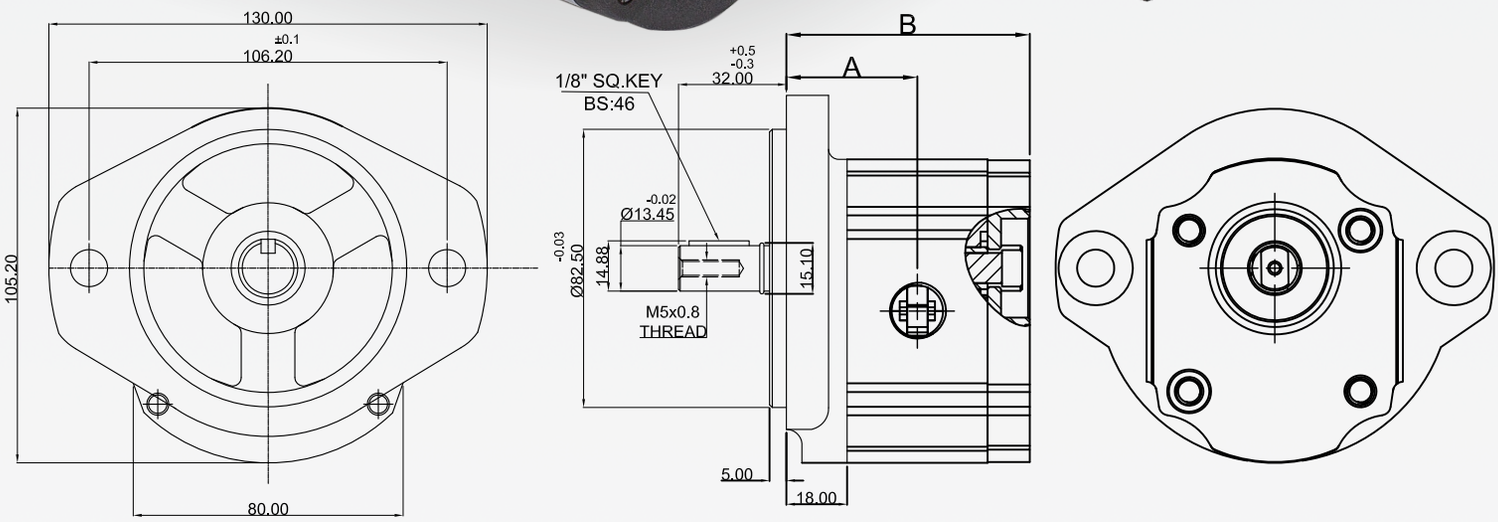

Model No.	Nominal Displacement cc/rev	Nominal Delivery lpm @ 1500 rpm	Max. Working Pressure (P1) Bar	Max. Speed rpm	DIMENSION			
					A	B	SUCTION	DELIVERY
					mm	mm		
10 C 1	1	1.2	200	3000	37.30	68.95	G 3/8"	G 3/8"
10 C 1.2	1.2	1.8	200	3000	37.60	69.75		
10 C 1.6	1.6	2.5	200	3000	38.10	70.75		
10 C 2.2	2.2	3.4	200	3000	38.80	72.15		
10 C 3.2	3.2	4.8	200	3000	39.80	74.15		
10 C 3.8	3.8	5.8	200	3000	40.60	75.70	G 1/2"	G 1/2"
10 C 4.5	4.5	6.8	200	3000	41.30	77.15		

10/OP + 10/OP

GROUP 10OP+10OP (Rear) PUMP

VARAK HYDRAULICS

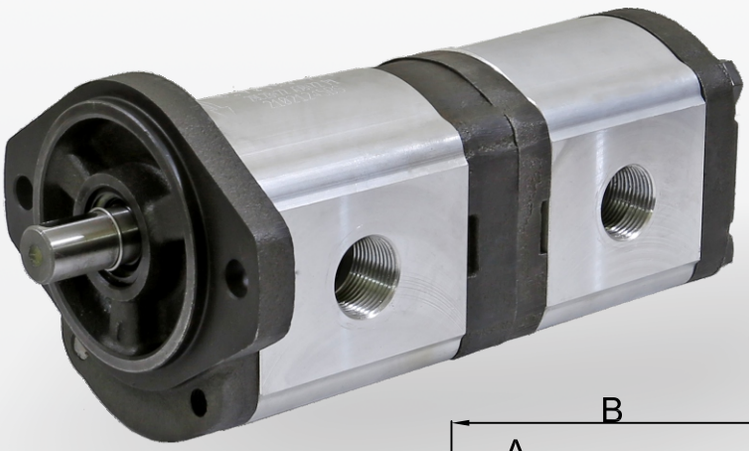

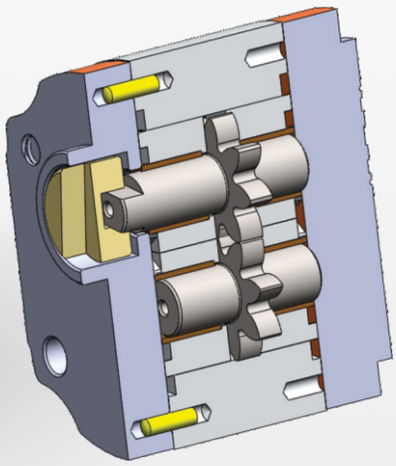

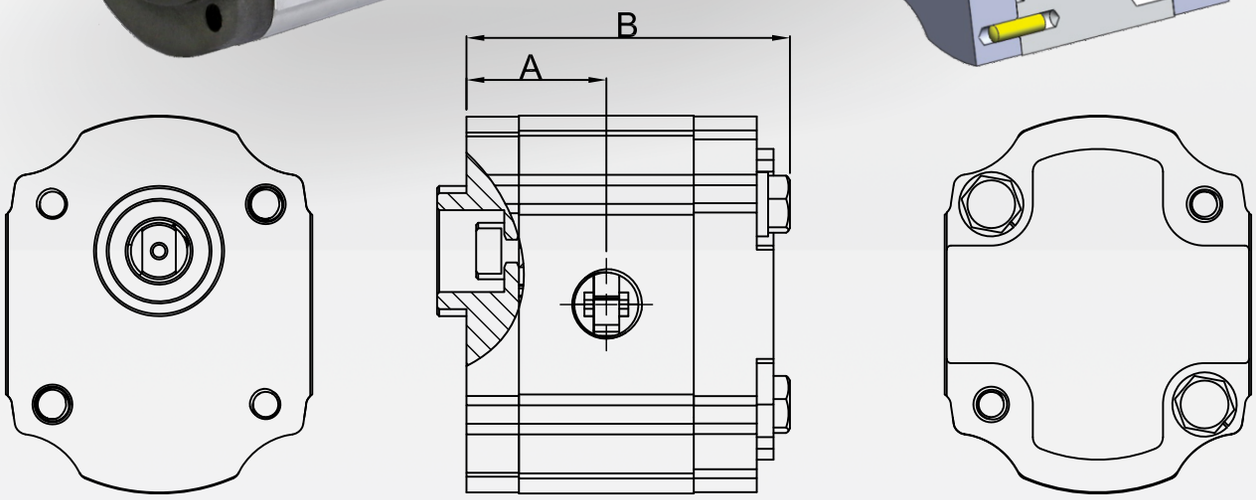

Model No.	Nominal Displacement cc/rev	Nominal Delivery lpm @ 1500 rpm	Max. Working Pressure (P1) Bar	Max. Speed rpm	DIMENSION			
					A	B	SUCTION	DELIVERY
					mm	mm		
10 C 1	1	1.2	200	3000	31.80	73.10	G 3/8”	G 3/8”
10 C 1.2	1.2	1.8	200	3000	32.10	73.90		
10 C 1.6	1.6	2.5	200	3000	32.60	74.90		
10 C 2.2	2.2	3.4	200	3000	33.30	76.30		
10 C 3.2	3.2	4.8	200	3000	34.30	78.30		
10 C 3.8	3.8	5.8	200	3000	35.10	79.85	G 1/2”	
10 C 4.5	4.5	6.8	200	3000	35.80	81.30		

FRONT PUMP SHAFTS

P

FRONT PUMP MOUNTING FLANGE

S

REAR COVER

CODE - V

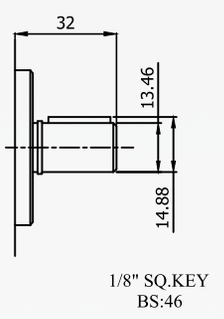

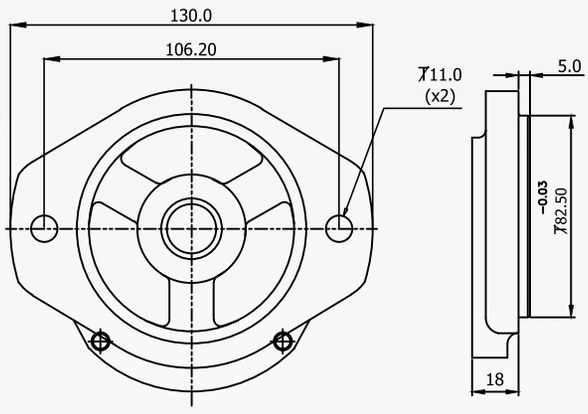

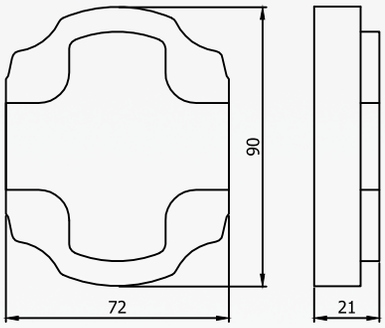

GROUP 10OP+10OP (Front & Rear) PUMP

VARAK HYDRAULICS

PORTS

CODE - T

Suction

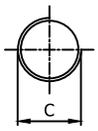

Delivery

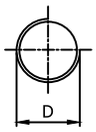

TYPE	C	D
10 C 1 to10 C 3.2	G 3/8”	G 3/8”
10 C 3.8 to10 C 4.5	G 1/2”	G 1/2”

HOW TO ORDER (GROUP 10/OP FRONT PUMP)

GROUP | **MODEL** | **ROTATION** | **SHAFT** | **MOUNTING** | **PORT**

GROUP: 10/OP-TF

MODEL:

MODEL	cc/rev	lpm @ 1500 rpm
10 C 1	1	1.2
10 C 1.2	1.2	1.8
10 C 1.6	1.6	2.5
10 C 2.2	2.2	3.4
10 C 3.2	3.2	4.8
10 C 3.8	3.8	5.8
10 C 4.5	4.5	6.8

ROTATION:

R	CW
L	CCW

SHAFT:

P	Parallel Ø 13.46

MOUNTING:

S	SAE A - 2 bolt

PORT:

T	Threaded

HOW TO ORDER (GROUP 10/OP REAR PUMP)

GROUP | **MODEL** | **PORT** | **REAR COVER**

GROUP: 10/OP-TR

MODEL:

MODEL	cc/rev	lpm @ 1500 rpm
10 C 1	1	1.2
10 C 1.2	1.2	1.8
10 C 1.6	1.6	2.5
10 C 2.2	2.2	3.4
10 C 3.2	3.2	4.8
10 C 3.8	3.8	5.8
10 C 4.5	4.5	6.8

PORT:

T	Threaded

REAR COVER:

V	Standard

20/1P + 20/1P

GROUP 201P+201P (Front) PUMP

VARAK HYDRAULICS

WE ARE MANUFACTURING TANDEM PUMPS WITH 'OLDHAM COUPLING' CONNECTION.

Benefits of the Oldham coupling:-

1. Interchangeability with combination of any pump(cc).
2. Both the pumps can be used at peak pressure.
3. The protection parts of the tang shaft seats in properly with coupling.
4. Since it is OLDHAM COUPLING, even if the motor bell housing pump (1st) and 2nd pumps are misaligned the functioning won't be affected.
5. The life of pumps are more, as the Oldham coupling takes care of the pump in its alignment. The guide bush life is fantastic and volumetric efficiency maintained.

ADVANTAGES:-

1. Both the pumps are connected with oldham coupling. By removing two bolts, the rear pump can be replaced without disturbing the first pump mounting. (if failure or replacement occurs at any stage)
2. Since it is separate construction. it is cost effective in the future as total pump need not have to replace.

Front or Rear pump can be procured separately from factory/dealers/stockists at any time.

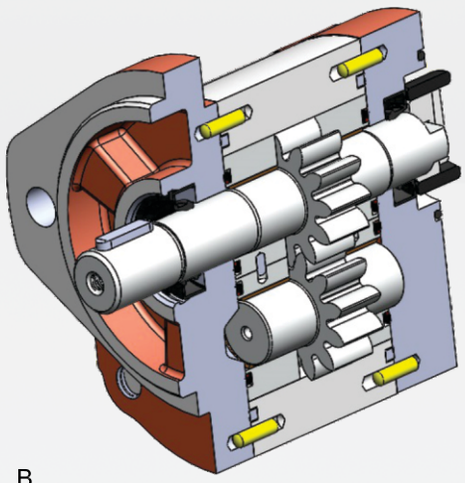

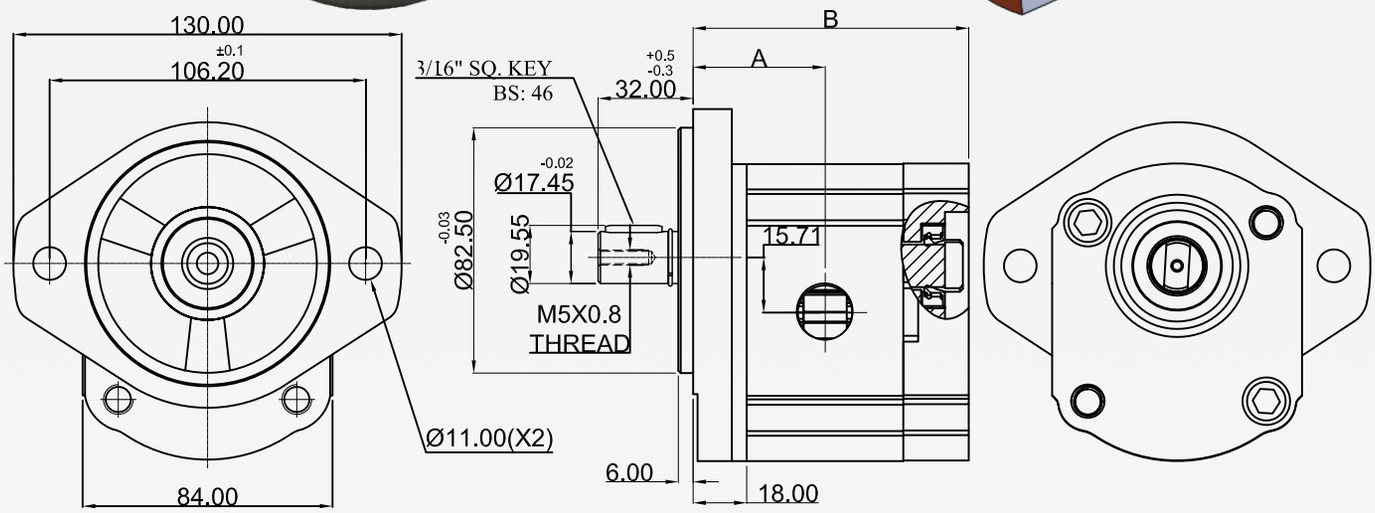

Model No.	Nominal Displacement cc/rev	Nominal Delivery lpm @ 1500 rpm	Max. Working Pressure (P1) Bar	Max. Speed rpm	DIMENSION			
					A	B	SUCTION	DELIVERY
					mm	mm		
20 C 6.1	6.1	8.0	250	3500	40.80	87.65	G 1/2"	G 1/2"
20 C 7	7	9.5	250	3500	41.80	88.65		
20 C 9	9	13.1	250	3500	42.30	92.65		
20 C 12	12	16.6	250	3500	44.30	96.65	G 3/4"	G 3/4"
20 C 14	14	20.5	250	3000	46.15	100.35		
20 C 17	17	24.0	250	3000	50.35	104.75		
20 C 19	19	27.7	230	3000	52.05	108.15		
20 C 22	22	33.0	210	3000	55.30	114.65		
20 C 28	28	41.0	180	2500	59.80	123.65		

20/1P + 20/1P

GROUP 201P+201P (Rear) PUMP

VARAK HYDRAULICS

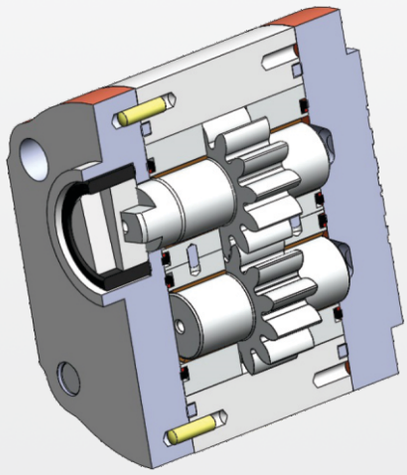

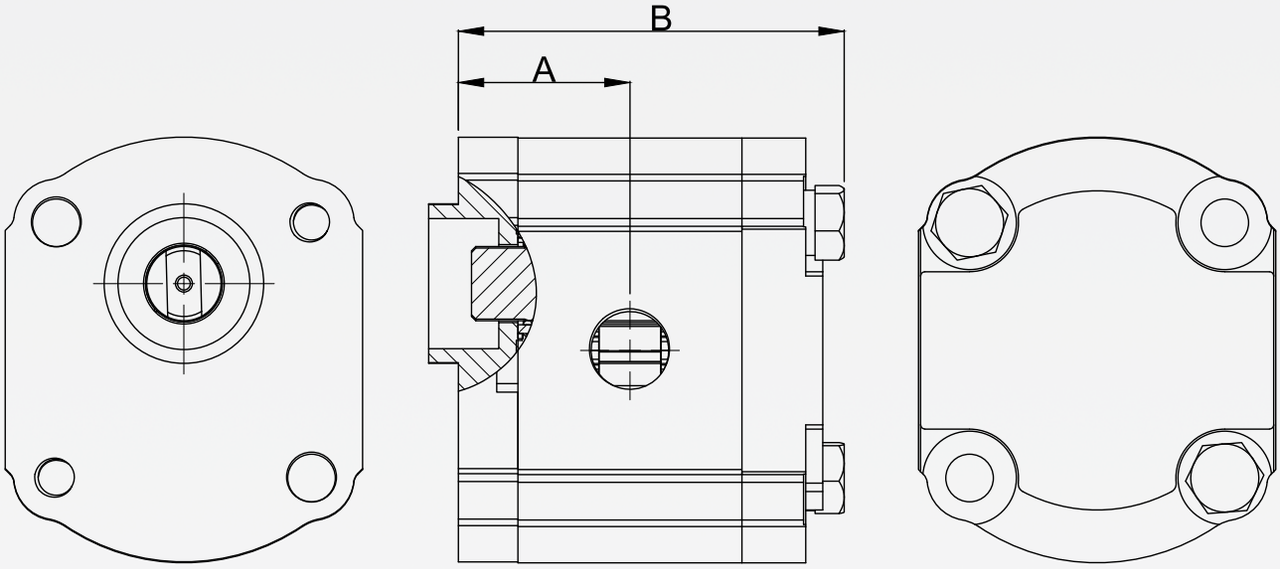

Model No.	Nominal Displacement cc/rev	Nominal Delivery lpm @ 1500 rpm	Max. Working Pressure (P1) Bar	Max. Speed rpm	DIMENSION			
					A	B	SUCTION	DELIVERY
					mm	mm		
20 C 6.1	6.1	8.0	250	3500	37.80	85.20	G 1/2”	G 1/2”
20 C 7	7	9.5	250	3500	38.30	86.20		
20 C 9	9	13.1	250	3500	40.30	90.20		
20 C 12	12	16.6	250	3500	42.15	93.90	G 3/4”	
20 C 14	14	20.5	250	3000	44.15	97.90		G 3/4”
20 C 17	17	24.0	250	3000	46.35	102.30		
20 C 19	19	27.7	230	3000	48.05	105.70		
20 C 22	22	33.0	210	3000	51.30	112.20		
20 C 28	28	41.0	180	2500	55.80	121.20		

TANDEM PUMP 201P+201P

VARAK HYDRAULICS

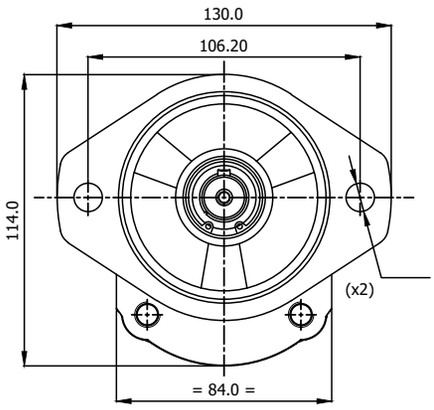

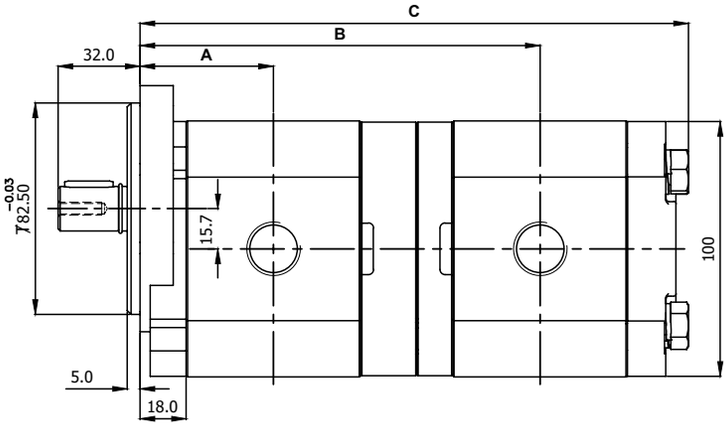

S.NO	Pump Type	Dimensions		
		A	B	C
1	20 C 6.1 + 20 C 6.1	41.80	125.40	172.70
2	20 C 7 + 20 C 6.1	42.30	126.40	173.70
3	20 C 7 + 20 C7	42.30	126.90	174.70
4	20 C9 +20 C 6.1	44.30	130.40	177.70
5	20 C9 +20 C7	44.30	130.90	178.70
6	20 C9 + 20 C9	44.30	132.90	182.70
7	20 C 12 + 20 C 6.1	46.15	134.10	181.40
8	20 C 12 + 20 C7	46.15	134.60	182.40
9	20 C 12 + 20 C9	46.15	136.60	186.40
10	20 C 12 + 20 C 12	46.15	138.45	190.10
11	20 C 14 + 20 C 6.1	46:15	138.10	185.40
12	20 C 14 + 20 7	48.15	138.60	186.40
13	20 C 14 + 20 C9	48.15	140.60	190.10
14	20 C 14 + 20 C 12	48.15	142.45	194.10
15	20 C 14 + 20 C 14	48.15	144.45	198.10
16	20 C 17 + 20 C 6.1	50.35	142.50	189.80
17	20 C 17 + 20 7	50.35	143.00	190.80
18	20 C 17 + 20 C9	50.35	145.00	194.80
19	20 C 17 + 20 C 12	50.35	146.85	198.50
20	20 C 17 + 20 C 14	50.35	148.85	206.90
21	20 C 17 + 20 C 17	50.35	151.05	206.90
22	20 C 19 + 20 C 6.1	52.05	145.90	193.20

S.NO	Pump Type	Dimensions		
		A	B	C
23	20 C 19 + 20 7	52.05	146.40	194.20
24	20 C 19 + 20 C 9	52.05	148.40	198.20
25	20 C 19 + 20 C 12	52.05	150.25	201.90
26	20 C 19 + 20 C 14	52.05	152.25	205.90
27	20 C 19 + 20 C 17	52.05	154.45	210.30
28	20 C 19 + 20 C 19	52.05	156.15	213.70
29	20 C 22 + 20 C 6.1	55.30	152.40	199.70
30	20 C 22 + 20 7	55.30	152.90	200.70
31	20 C 22 + 20 C 9	55.30	154.90	204.70
32	20 C 22 + 20 C 12	55.30	156.75	208.40
33	20 C 22 + 20 C 14	55:30	158.75	212.40
34	20 C 22 + 20 C 17	55.30	160.95	216.80
35	20 C 22 + 20 C 19	55.30	162.65	220.20
36	20 C 22 + 20 C 22	55.30	165.90	226.70
37	20 C 28 + 20 C 6.1	59.80	161.40	208.70
38	20 C 28 + 20 7	59.80	161.90	209.70
39	20 C 28 + 20 C 9	59.80	163.90	213.70
40	20 C 28 + 20 C 12	59.80	165.75	217.40
41	20 C 28 + 20 C 14	59.80	167.75	221.40
42	20 C 28 + 20 C 17	59.80	169.95	225.80
43	20 C 28 + 20 C 19	59.80	171.65	229.20
44	20 C 28 + 20 C 22	59.80	174.90	235.70
45	20 C 28 + 20 C 28	59.80	179.40	244.70

SHAFTS

P

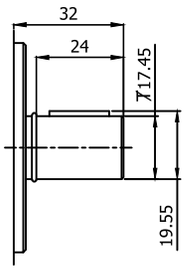

BS:46
3/16" SQ.KEY

MOUNTING FLANGE

S

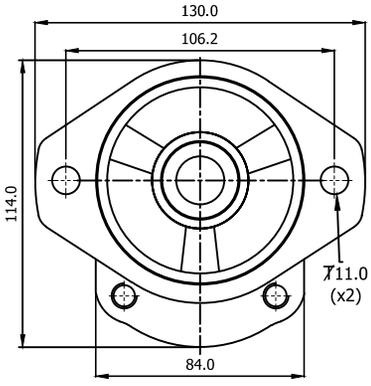

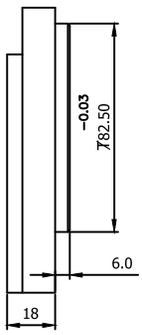

REAR COVER

CODE - V

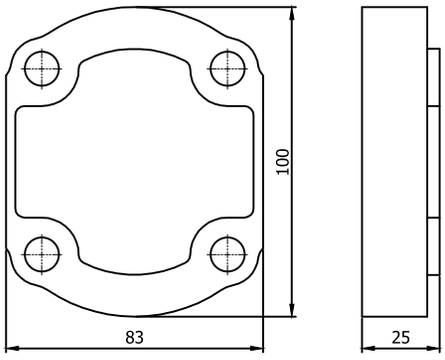

PORTS

CODE - T

Suction

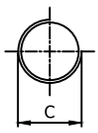

Delivery

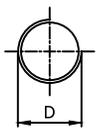

TYPE	C	D
20 C 6.1 to 20 C 9	G 1/2”	G 1/2”
20 C 12	G 3/4”	G 1/2”
20 C 14 to 20 C 28	G 3/4”	G 3/4”

20 1P + 20 1P TANDEM PUMP ASSEMBLY

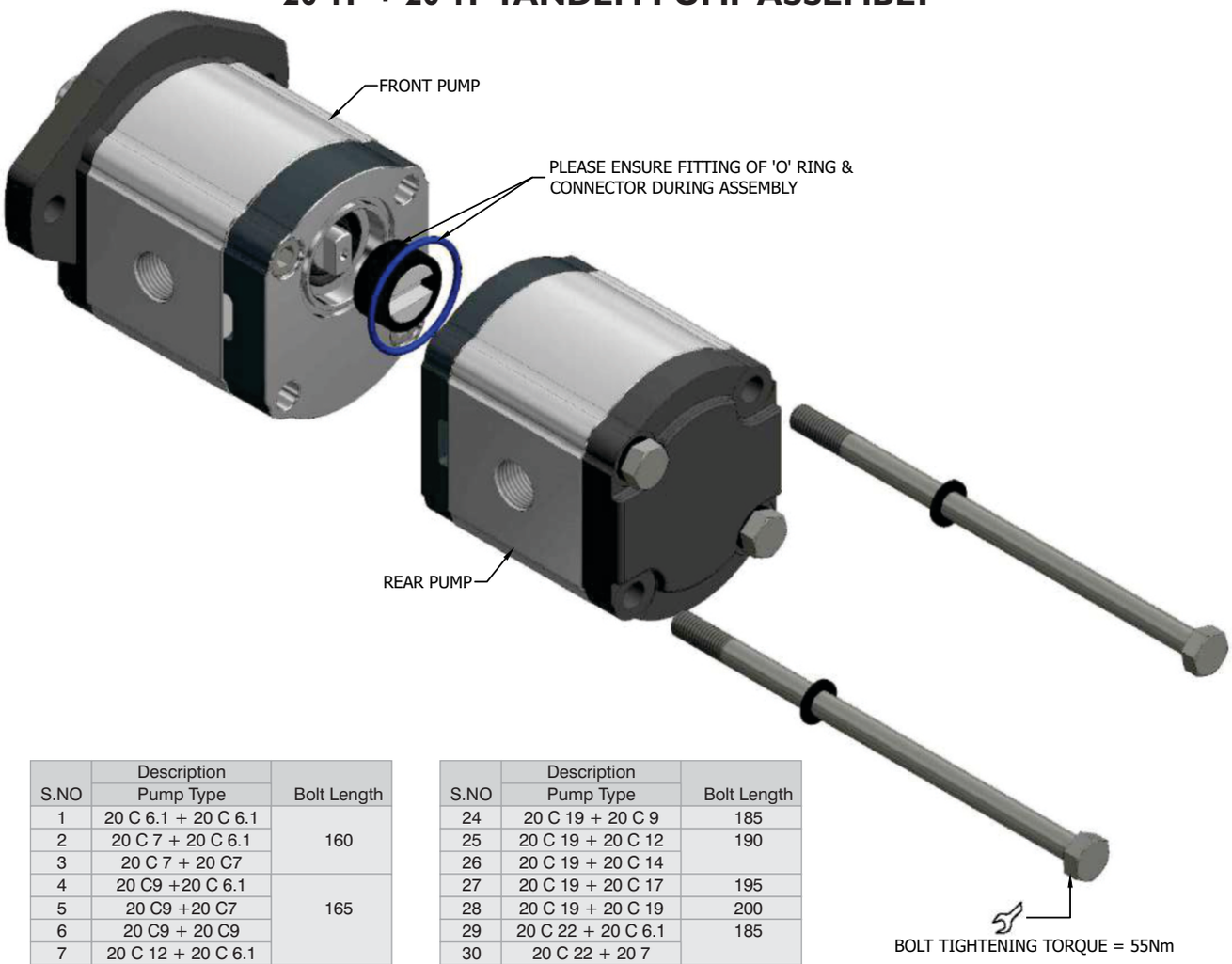

S.NO	Description Pump Type	Bolt Length
1	20 C 6.1 + 20 C 6.1	160
2	20 C 7 + 20 C 6.1	
3	20 C 7 + 20 C7	
4	20 C9 +20 C 6.1	165
5	20 C9 +20 C7	
6	20 C9 + 20 C9	
7	20 C 12 + 20 C 6.1	
8	20 C 12 + 20 C7	170
9	20 C 12 + 20 C9	175
10	20 C 12 + 20 C 12	
11	20 C 14 + 20 C 6.1	170
12	20 C 14 + 20 7	175
13	20 C 14 + 20 C9	
14	20 C 14 + 20 C 12	180
15	20 C 14 + 20 C 14	185
16	20 C 17 + 20 C 6.1	175
17	20 C 17 + 20 7	
18	20 C 17 + 20 C9	180
19	20 C 17 + 20 C 12	185
20	20 C 17 + 20 C 14	190
21	20 C 17 + 20 C 17	195
22	20 C 19 + 20 C 6.1	180
23	20 C 19 + 20 7	

S.NO	Description Pump Type	Bolt Length
24	20 C 19 + 20 C 9	185
25	20 C 19 + 20 C 12	190
26	20 C 19 + 20 C 14	
27	20 C 19 + 20 C 17	195
28	20 C 19 + 20 C 19	200
29	20 C 22 + 20 C 6.1	185
30	20 C 22 + 20 7	
31	20 C 22 + 20 C 9	190
32	20 C 22 + 20 C 12	195
33	20 C 22 + 20 C 14	
34	20 C 22 + 20 C 17	200
35	20 C 22 + 20 C 19	205
36	20 C 22 + 20 C 22	210
37	20 C 28 + 20 C 6.1	195
38	20 C 28 + 20 7	
39	20 C 28 + 20 C 9	200
40	20 C 28 + 20 C 12	
41	20 C 28 + 20 C 14	205
42	20 C 28 + 20 C 17	210
43	20 C 28 + 20 C 19	215
44	20 C 28 + 20 C 22	220
45	20 C 28 + 20 C 28	230

GROUP 201P+201P (Front & Rear) PUMP

VARAK HYDRAULICS

HOW TO ORDER (GROUP 20/1P FRONT PUMP)

GROUP	MODEL	ROTATION	SHAFT	MOUNTING	PORT

20/1P-TF

MODEL	cc/rev	lpm @ 1500 rpm
20 C 6.1	6.1	8.0
20 C 7	7	9.5
20 C 9	9	13.1
20 C 12	12	16.6
20 C 14	14	20.5
20 C 17	17	24.0
20 C 19	19	27.7
20 C 22	22	33.0
20 C 28	28	41.0

R	CW
L	CCW

P	Parallel 7 13.46

S	SAE A - 2 bolt

T	Threaded

HOW TO ORDER (GROUP 20/1P REAR PUMP)

GROUP	MODEL	PORT	REAR COVER

20/1P-TR

MODEL	cc/rev	lpm @ 1500 rpm
20 C 6.1	6.1	8.0
20 C 7	7	9.5
20 C 9	9	13.1
20 C 12	12	16.6
20 C 14	14	20.5
20 C 17	17	24.0
20 C 19	19	27.7
20 C 22	22	33.0
20 C 28	28	41.0

T	BSP Threaded

V	Standard

VARAK
HYDRAULICS

HI-TECH HYDRAULICS

28/29, New Sonal Link Service Indl. Estate, Link Road,
Malad (West), Mumbai - 400064. Maharashtra. INDIA.
Tel: +91 22-79692008 Mob: +91-8433648864, 96199 10011
Email: hitechhydraulics9@gmail.com, sales@hitechhyd.com